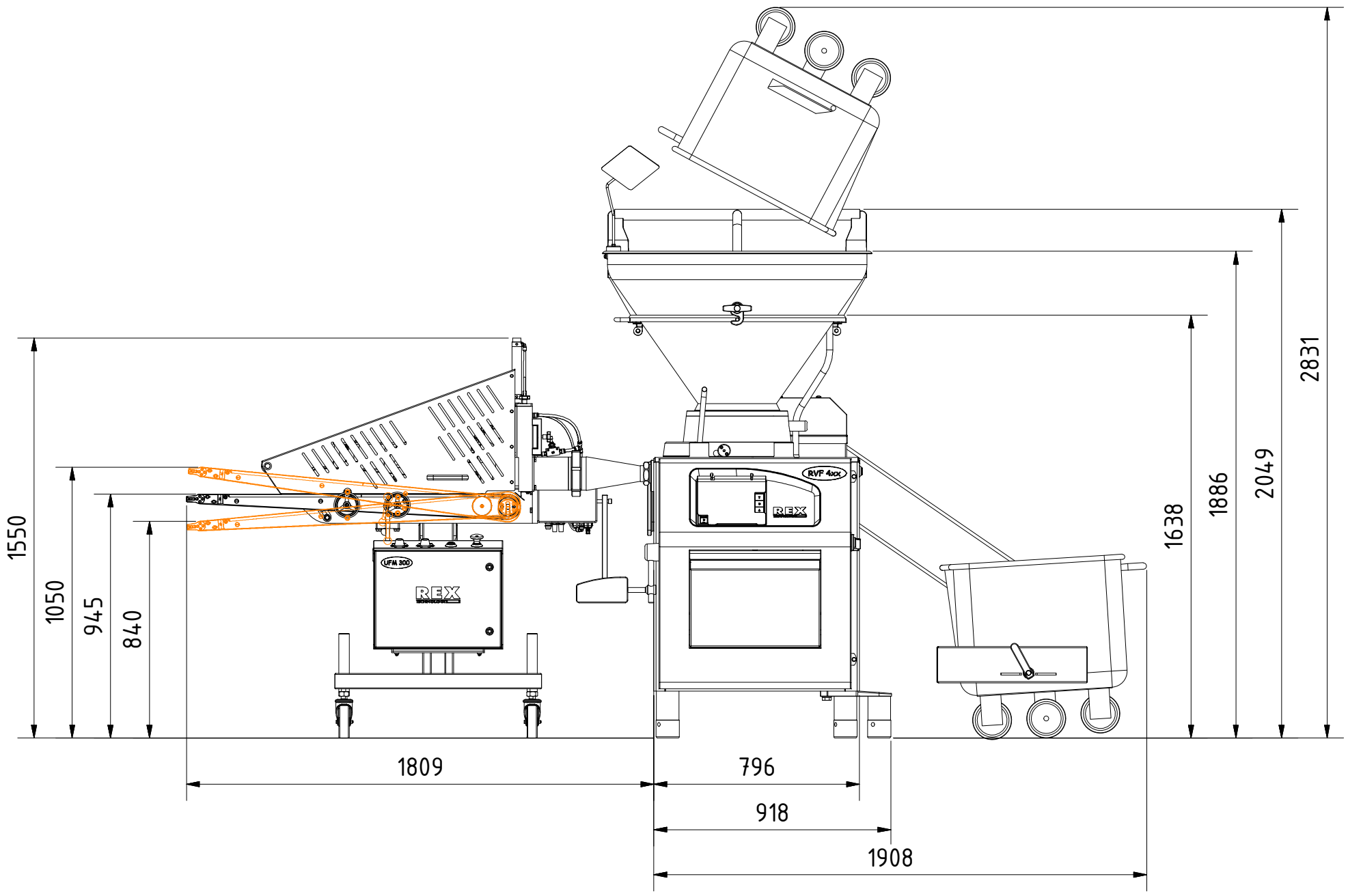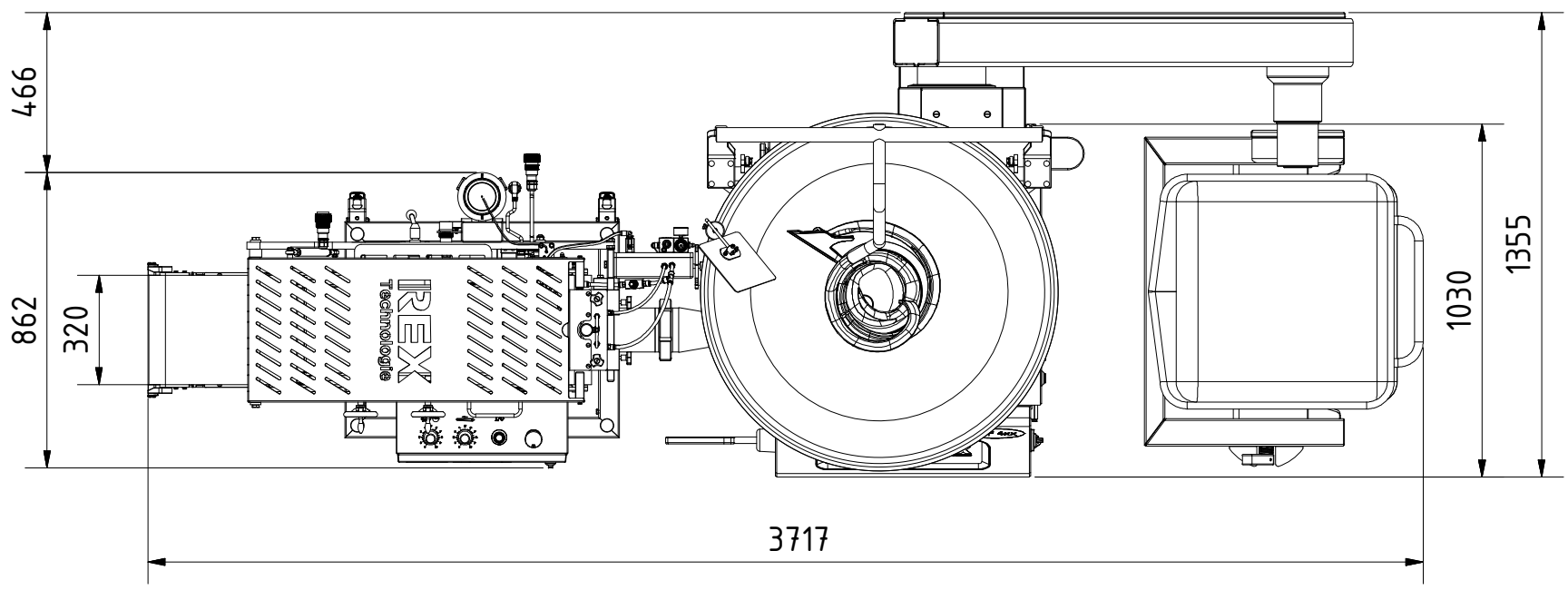Scale drawing 300-5